L E Flory

Junior VoltOhmyst

Stock No. 165

ENGINEERING
PROPERTY

Eng. Meter Room. Ext. 513

Manufactured by

RCA Manufacturing Company, Inc.

Camden, N. J., U. S. A.

For # 1778 4-25-44 pc.

Eng. Meter Room. Ext. 513

"A SERVICE OF THE RADIO CORPORATION OF AMERICA"

1B-32041-1

To be Kept with # 1778

ENGINEERING
PROPERTY
Eng. Meter Room. Ext. 513

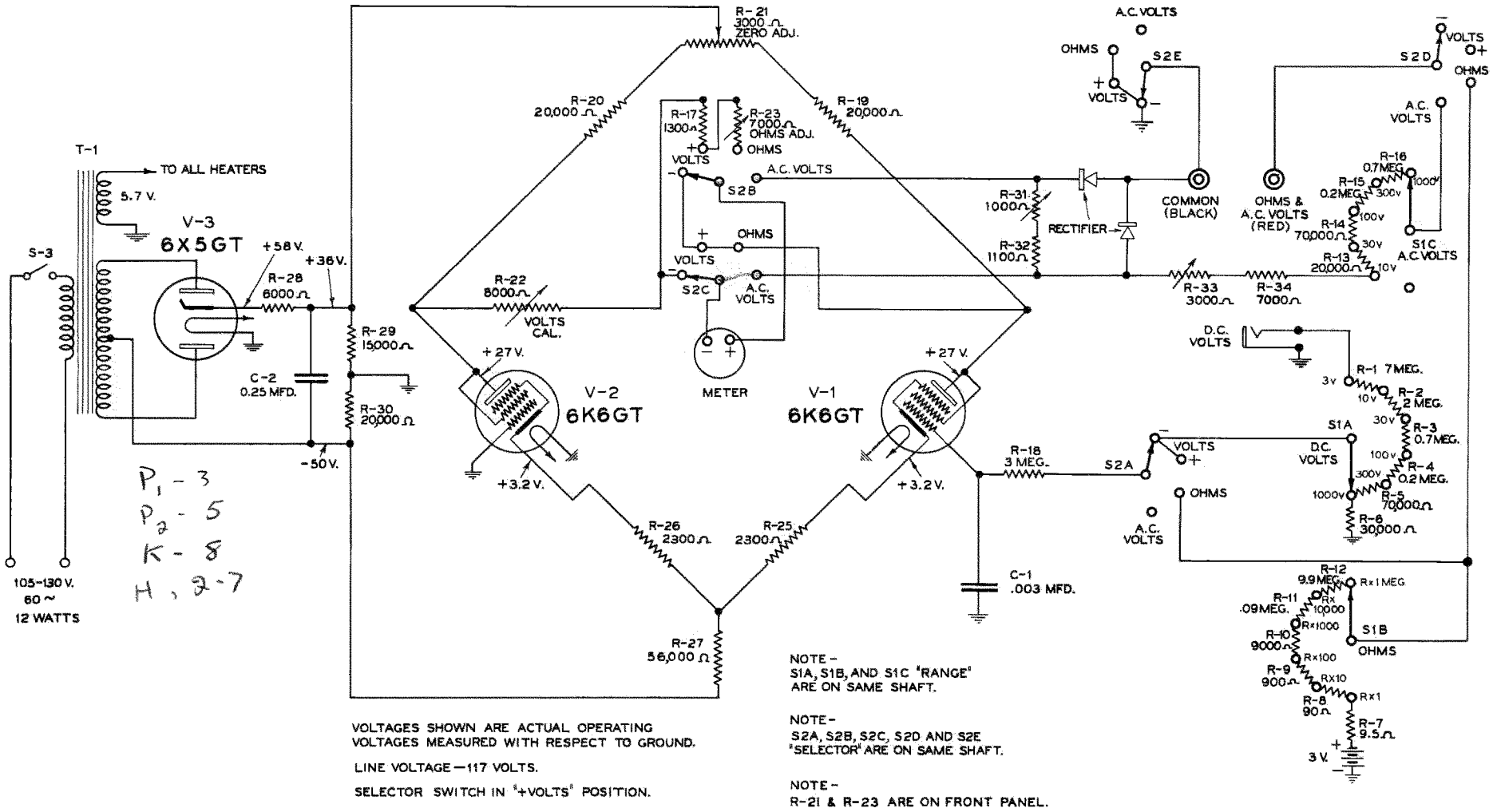
T-1
TO ALL HEATERS
5.7 V.
V-3
6X5GT
+58 V.
+36 V.
S-3
R-28
6000 Ω
C-2
0.25 MFD.
R-29
15,000 Ω
R-30
20,000 Ω
-50 V.
105-130 V.
60 ~
12 WATTS
P1 - 3
P2 - 5
K - 8
H, 2-7
R-21
3000 Ω
ZERO ADJ.
R-20
20,000 Ω
R-19
20,000 Ω
R-17
1300 Ω
R-23
7000 Ω
OHMS ADJ.
OHMS
VOLTS
S2B
A.C. VOLTS
OHMS
VOLTS
S2C
A.C.
VOLTS
R-22
8000 Ω
VOLTS
CAL.
METER
+27 V.
V-2
6K6GT
+3.2 V.
V-1
6K6GT
+27 V.
+3.2 V.
R-26
2300 Ω
R-25
2300 Ω
R-27
56,000 Ω
R-31
1000 Ω
R-32
1100 Ω
RECTIFIER
COMMON
(BLACK)
OHMS &
A.C. VOLTS
(RED)
R-33
3000 Ω
R-34
7000 Ω
R-18
3 MEG.
S2A
VOLTS
OHMS
A.C.
VOLTS
C-1
.003 MFD.
A.C. VOLTS
OHMS
S2E
VOLTS
S2D
VOLTS
OHMS
A.C.
VOLTS
R-16
0.7 MEG.
R-15
0.2 MEG.
300v
1000v
R-14
70,000 Ω
100v
30v
R-13
20,000 Ω
10v
S1C
A.C. VOLTS
D.C.
VOLTS
3v
R-1 7 MEG.
10v
R-2
2 MEG.
30v
R-3
0.7 MEG.
S1A
D.C.
VOLTS
100v
R-4
0.2 MEG.
300v
1000v
R-5
70,000 Ω
R-6
30,000 Ω
R-12
9.9 MEG.
Rx1 MEG
R-11
.09 MEG.
Rx
10,000
Rx1000
R-10
9000 Ω
Rx100
R-9
900 Ω
Rx10
R-8
90 Ω
Rx1
R-7
9.5 Ω
3 V.
S1B
OHMS
NOTE -
S1A, S1B, AND S1C "RANGE"
ARE ON SAME SHAFT.
NOTE -
S2A, S2B, S2C, S2D AND S2E
"SELECTOR" ARE ON SAME SHAFT.
NOTE -
R-21 & R-23 ARE ON FRONT PANEL.
VOLTAGES SHOWN ARE ACTUAL OPERATING
VOLTAGES MEASURED WITH RESPECT TO GROUND.
LINE VOLTAGE — 117 VOLTS.
SELECTOR SWITCH IN "+VOLTS" POSITION.

Figure 1

1778

GENERAL DESCRIPTION

The RCA Junior VoltOhmyst, Stock No. 165, is designed to measure DC and AC voltages and resistances over an extremely wide range. Outstanding features of the instrument are its ease of operation; high input resistance; foolproof DC voltmeter which is automatically protected against burn-out; foolproof ohmmeter automatically protected against burn-out even if a high voltage is present across the resistance being measured; "ZERO ADJ." and "OHMS ADJ." that **do not have to be reset when changing ranges;** and its "signal tracing" type of test probe which permits dynamic voltage measurements in signal carrying circuits without interfering with the action of the circuit. As a DC or AC voltage measuring device its range of operation is from 0.05 volts to 1,000 volts. Its input resistance (11,000,000 ohms) is constant on all DC ranges. Thus the sensitivity on the 3 volt DC scale is 3,666,666 ohms per volt.

The Junior VoltOhmyst will measure DC voltages which are positive or negative with respect to ground without switching leads. It will not interfere with the operation of any circuit or element across which it may be connected. It is not necessary to reset the zero adjustment when changing voltage ranges and all voltage measurements, regardless of polarity, can be made with the common lead connected to the chassis or ground simply by turning the polarity reversing switch.

During AC voltage measurements, with the "SELECTOR" in AC position the instrument is completely isolated from the line, and all AC voltages up to 1,000 volts can be measured. To secure complete isolation from the line, a rugged copper-oxide rectifier unit is used. The sensitivity for AC measurements is 1,000 ohms per volt. The instrument need not be plugged into the line for AC measurements. The input circuit to the AC Voltmeter is polarized so that the meter is protected should DC voltages be accidentally measured with the AC probe while the "SELECTOR" switch is in the "AC VOLTS" position and the "COMMON" lead connected to chassis ground.

The Ohmmeter covers the extremely wide range from 0.1 ohm to 1,000 megohms and does not require resetting of the zero adjustment when changing ranges. The Ohmmeter test voltage, applied across the resistance being tested, varies from 0.03 volts across 0.1 ohms to a maximum of 3 volts across 1,000 megohms.

The Junior VoltOhmyst is intended for operation from a line voltage of 105 to 130 volts 60 cycles and the power consumption is 12 watts. It is shipped from the factory complete with all 3 test leads, tubes, and pilot lamp.

CIRCUIT DESCRIPTION

The Junior VoltOhmyst uses a push-pull DC electronic vacuum tube voltmeter of new design. Its schematic circuit is given in Figure 1. This circuit is very similar to the circuit used in the famous RCA Rider VoltOhmyst which has had very wide acceptance in many fields. Unlike the conventional balanced voltmeter, the two type 6K6GT tubes are linked by means of a common high resistance R-27. Because of this coupling any change in the input voltage to the grid of V-1 changes the cathode bias of V-2 and as a result the change in the plate current of V-1 is accompanied by a simultaneous change in the plate current of V-2 in the opposite direction. The differential voltage thus developed across the load resistors R-19 and R-20 is applied to the meter which is calibrated in terms of the voltage applied to the grid of V-1, and in terms of resistance when the instrument is being used as an Ohmmeter.

In addition to the push-pull action, a high degree of self regulation is obtained as a direct result of the high value of coupling resistance R-27. This is due to the regulating effect secured through the use of self bias, but because R-27 is approximately 100 times as large as the value of cathode resistance which it is possible to use in conventional circuits, the self regulating action is correspondingly increased. At the same time the excessive loss of sensitivity normally experienced when using such a high cathode resistance is eliminated in the VoltOhmyst because of the balanced nature of the circuit. A controlled amount of inverse feedback to obtain independence of tube characteristics is secured by means of the two resistors R-25 and R-26.

A principal factor limiting the maximum input resistance of DC vacuum tube voltmeters has been the problem of reducing grid current and the so-called "contact potential" error to a low value. In the Junior VoltOhmyst, this problem has been solved successfully by the choice of a suitable tube type, the use of a very high cathode resistance, and by operation at a low plate voltage.

A one megohm resistor is built into the ungrounded but shielded d.c. voltmeter probe which effectively makes it a "signal tracing" type of probe and makes possible dynamic voltage measurements in signal carrying circuits.

The Ohmmeter circuit places the unknown resistance in series with a 3 volt battery and one of six standard multiplying resistors. The electronic d.c. voltmeter is then used to measure the voltage drop across the unknown resistor. The standard resistors range in value from 10 ohms to 10 megohms, which provide multiplying factors from Rx1 to Rx1,000,000.

As is to be expected from a consideration of the circuit, the Junior VoltOhmyst is exceedingly stable in operation, requires no readjustment of the zero adjusters when changing ranges, and is essentially independent of changes in line voltage and tube characteristics.

INITIAL ADJUSTMENT

Plug the red lead into the pin jack marked "OHMS-AC," plug the black lead into the pin jack marked "COMMON," and plug the blue lead into the jack marked "DC VOLTS." If necessary turn the meter centering screw until the meter pointer reads exactly zero.

Plug the power cord into the 110 volt AC supply, turn the power switch to the "ON" position, and allow several minutes for the instrument to warm up.

Turn the "SELECTOR" switch to the "+ VOLTS" position and adjust the "ZERO ADJ." control, until the meter pointer reads zero. When this adjustment is correctly made there will be no movement of the pointer

when the "SELECTOR" switch is turned from "+ VOLTS" to "— VOLTS."

Turn the "SELECTOR" switch to the "OHMS" position. The pointer will now deflect to approximately full scale. Then turn the "OHMS ADJ." control so that the pointer reads exactly to the last line of the "OHMS" scale.

The instrument is now ready for use to measure resistance, AC voltage, or DC voltage.

DC VOLTAGE MEASUREMENTS

Connect the ground lead (black lead with alligator clip on the end) to the ground terminal of the apparatus on which voltage measurements are to be made, or to the grounded side of the voltage which is to be measured.

Set the "RANGE" switch to the proper range for the voltage which is to be measured. Set the "SELECTOR" switch to "— VOLTS" or "+ VOLTS" according to the polarity of the voltage to be measured.

Use the blue voltmeter lead and place its probe tip in contact with the point at which the DC voltage is to be measured, being careful to keep the fingers well away from the probe tip in order to avoid stray pickup.

All DC voltages should be read on the scales marked "VOLTS."

Greatest accuracy is always secured when a meter deflection as close to full scale as possible is obtained. Therefore, it is always advisable to use whatever setting of the "RANGE" switch will produce this deflection.

Never attempt to use a reading which may be slightly beyond the last calibration mark on the meter scale because such readings are likely to be very inaccurate.

The ground lead of the Junior VoltOhmyst should always be connected to the grounded side of the apparatus being measured. When a voltage is to be measured, both sides of which are above ground potential, readings should be taken between ground and each of the two sides. The difference between these two readings will then be the voltage existing between the two points in question.

AC VOLTAGE MEASUREMENTS

AC voltages should always be measured by using the red lead and the black lead. The "SELECTOR" switch should be turned to the "AC VOLTS" position which isolates the meter and the red and black leads from all other circuits. Consequently it is immaterial whether or not the instrument is plugged into the power line or the power switch turned on.

The "RANGE" switch should always be turned to a higher scale than the voltage to be measured before the test leads are connected to this voltage. If necessary the "RANGE" switch can then be rotated to a lower scale. This procedure will protect the meter from severe overload which might damage the instrument when measuring AC voltage. The 0-10 AC scale is drawn separately on the meter. It is the bottom scale and is clearly marked "AC." Voltages between 10 and 1,000 volts AC are read on the scale marked "VOLTS."

CAUTION! HIGH VOLTAGES ARE DANGEROUS! Use the utmost care to avoid accidental contact with, or even close proximity to high voltage points. Use one hand only! Keep the fingers and all other parts of the body as far away as conveniently possible from any high potential point. If at all possible when making high voltage measurements attach the test leads to the circuit to be measured with the power turned off. As soon as the measurement is completed, turn the power off again and immediately remove the test leads.

RESISTANCE MEASUREMENTS

Before attempting any resistance measurements care should be taken to see that the resistance being measured is not connected across any source of voltage and also that no voltage exists between either terminal of the resistance and ground.

The red, and black leads should be used for all resistance measurements. The "SELECTOR" switch should be rotated to the "OHMS" position. The "RANGE" switch should be rotated until a reading as near mid-scale deflection as possible is secured. The resistance in ohms is then obtained by multiplying the reading shown on the "OHMS" scale by the factor indicated on the "RANGE" switch.

It is recommended that the "Rx1" position of the "RANGE" switch be used only for resistance measurements below 20 ohms.

To cancel the lead resistance error when making measurements below 2 ohms short the test leads together and reset the "ZERO ADJ." control so that the pointer reads exactly zero. This new setting will be slightly different from the original setting because of the resistance of the test leads. Then make the regular resistance check. When the measurement has been completed the "ZERO ADJ." control should be reset in accordance with the procedure given above under subject heading "INITIAL ADJUSTMENT."

When measuring high resistances the fingers should be kept away from the red lead and its probe. This will eliminate possible error due to leakage and stray pickup. This is especially important on the "Rx10,000" and "Rx1 MEG." ranges.

RESISTANCE MEASUREMENTS ABOVE 1,000 MEGOHMS

The voltmeter section of the Junior VoltOhmyst can be used to measure resistances higher than those covered on the "Rx1 MEG." range. This application is espe-

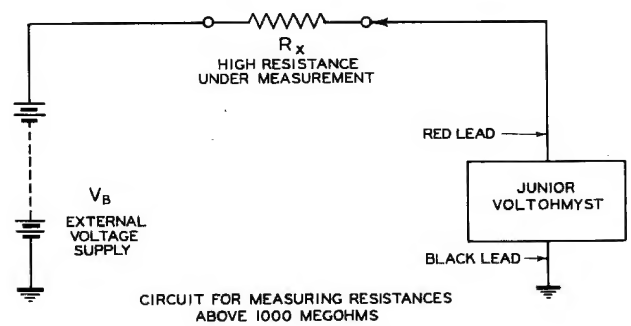

Figure 2

cially useful for the measurement of the leakage resistance of paper and mica condensers which, for the smaller capacities, is usually above 1,000 megohms.

An external voltage supply is required as shown in figure 2. This voltage may range in value from approximately 20 to 500 volts. The higher the voltage the higher the value of resistance which it is possible to measure. Make connections as shown in figure 2 and note the DC voltage reading on the Junior VoltOhmyst. If this voltage is very small increase the value of the external voltage supply until it can be conveniently measured. The unknown resistance can then be found from the following formula.

$$\text{Unknown Resistance (In Megohms)} = 11 \times \frac{\text{External Voltage—Reading of Junior VoltOhmyst}}{\text{Reading of Junior VoltOhmyst}}$$

Example:

External Voltage Supply = 500
Reading of Junior VoltOhmyst = 2

$$\text{Unknown Resistance} = 11 \times \frac{500-2}{2} = 2{,}739 \text{ Megohms}$$

MAINTENANCE

Figure 1 shows the schematic circuit diagram of the Junior VoltOhmyst. The voltages shown on this diagram are actual operating voltages when the instrument is operated on a line voltage of 117 volts. Another Junior VoltOhmyst or an RCA Rider VoltOhmyst can be used for checking these voltages.

DC CALIBRATION ADJUSTMENT: The Junior VoltOhmyst is provided with a calibration adjustment R-22 (figure 3) which is originally set at the factory to compensate for variations in meter sensitivity and tube characteristics. This adjustment ordinarily does not require changing except when tubes are replaced. If readjustment is necessary, use a known source of DC voltage of exactly 3 volts and proceed as follows:

1. Check the mechanical zero of the meter.
2. Turn on the power, allow the instrument to warm up for several minutes, turn the "SELECTOR" switch to position marked "+ VOLTS," turn the "RANGE" switch to position marked "3V.DC," and turn the "ZERO ADJ." until the meter reads exactly zero.
3. Connect the Junior VoltOhmyst across the source of exactly 3 volts.
4. Adjust R-22 so that the meter reads exactly 3 volts.
5. This completes the adjustment. The two 6K6GT tubes should not be interchanged since this may have a slight effect on the accuracy of calibration.

AC CALIBRATION ADJUSTMENT: Two internal adjustments, R-31 and R-33 (figure 3), which are set at the factory, are provided to compensate for variation in both rectifier and meter characteristics, and to insure the greatest possible accuracy of the AC ranges. These adjustments should not be changed unless one or more of the components in the AC voltmeter section of the circuit is replaced. If necessary to readjust, proceed as follows:

1. Check the mechanical zero of the meter.
2. Set the "SELECTOR" switch to position marked "AC VOLTS" and the "RANGE" switch to position marked "100 V." Apply an AC voltage of exactly 100 volts to the test leads. This voltage should be of good wave form and should be measured by an instrument which is known to be accurate. The 60 cycle power line is a convenient source of such voltage.
3. Adjust R-31 so that the meter reads exactly full scale (100 volts).
4. Remove the 100 volts and apply a known voltage of 10 volts to the test leads. Set the "RANGE" switch to 10 volts.
5. Adjust R-33 so that the meter reads exactly full scale (10 volts).
6. The procedure for adjusting R-31 and R-33 should be repeated until no further change is required. Usually it will not be necessary to go over these adjustments more than two times.

TUBES: The Junior VoltOhmyst employs two type 6K6GT and one type 6X5GT RCA preferred type tubes. Because of the low operating voltages the tube life will be unusually long. However, when replacement becomes necessary, care should be taken to see that the two type 6K6GT tubes are approximately balanced. If they are unbalanced, it will be impossible to bring the pointer to zero by means of the "ZERO ADJ." control. If this should happen, the tubes should be interchanged and the adjustment tried again. If it is still impossible to bring the pointer to zero, the tubes have different characteristics and each one should be matched with another tube in order to obtain a balanced pair. When the tubes are matched, it will be possible to bring the pointer to zero with the "ZERO ADJ." control approximately in the middle of its range. The unique circuit design of the Junior VoltOhmyst is such that grid current is reduced to a negligible value. However, when replacing tubes, it is advisable to check for grid current as occasionally a gassy tube will be found. The presence of gas is indicated by an appreciable change in the pointer position when the "RANGE" switch is changed from the 3 volt position to the 30 volt position while the "SELECTOR" switch is in the "+ VOLTS" position.

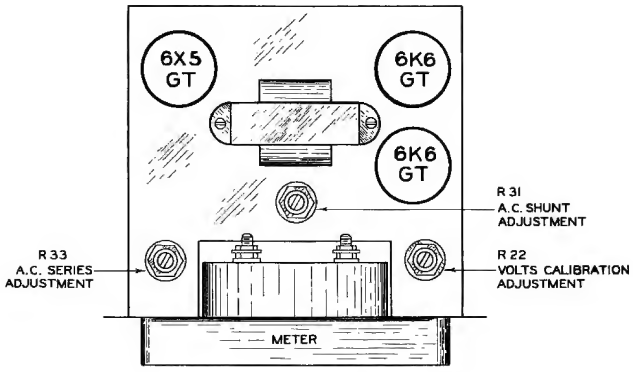

Figure 3

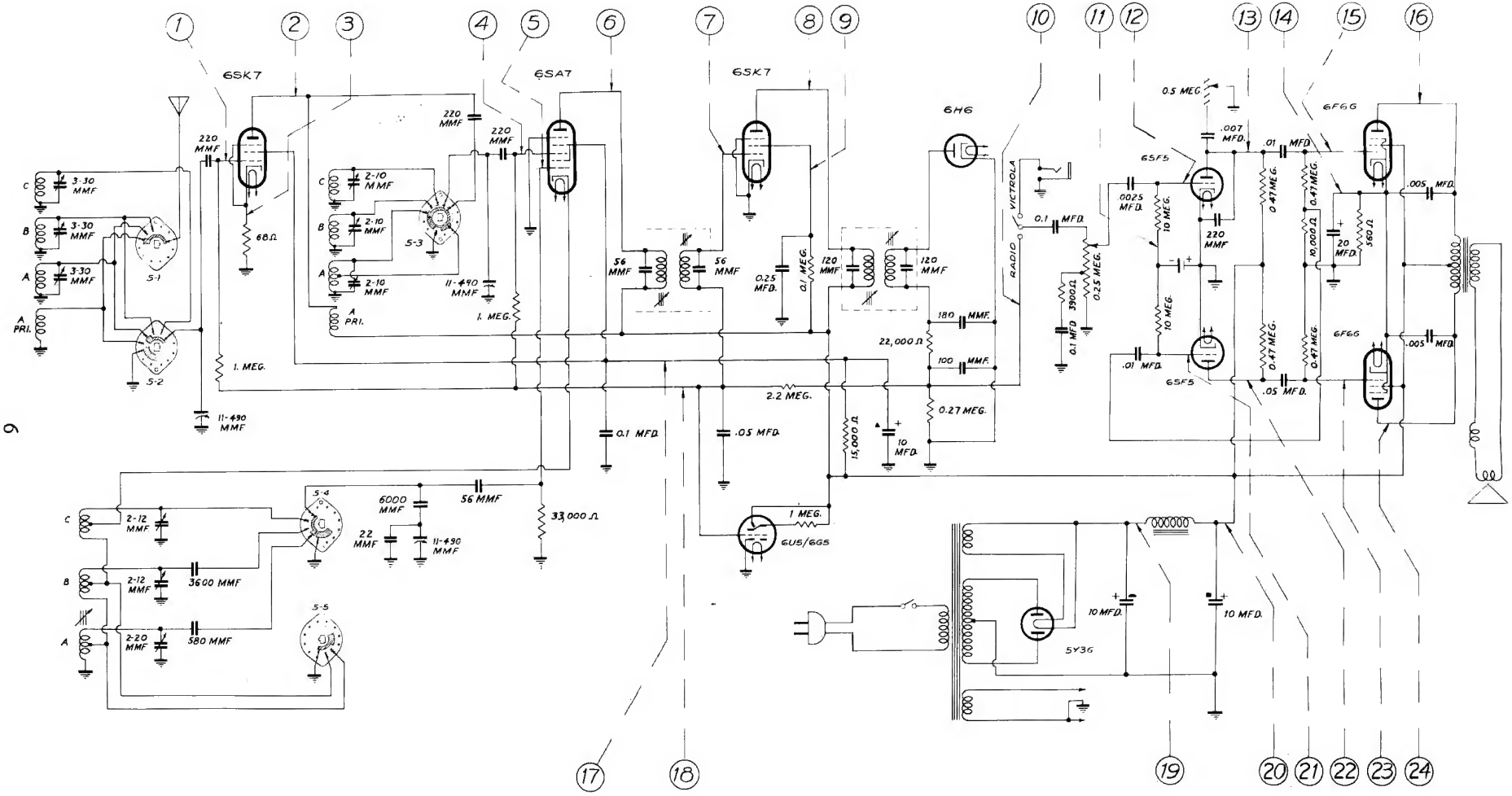
6SK7
6SA7
6SK7
6H6
6F6G
6F6G
6SF5
6SF5
6U5/6G5
5Y3G
VICTROLA
RADIO
A PRI.
S-1
S-2
S-3
S-4
S-5
3-30 MMF
2-10 MMF
2-12 MMF
2-20 MMF
220 MMF
68Ω
1. MEG.
11-490 MMF
56 MMF
120 MMF
0.25 MFD.
0.1 MEG.
2.2 MEG.
0.1 MFD.
.05 MFD.
15,000 Ω
10 MFD.
180 MMF.
22,000 Ω
100 MMF.
0.27 MEG.
33,000 Ω
6000 MMF
22 MMF
3600 MMF
580 MMF
0.5 MEG.
.007 MFD.
.01 MFD.
.0025 MFD.
10 MEG.
0.47 MEG.
10,000 Ω
20 MFD.
560 Ω
.005 MFD.
.05 MFD.
3900 Ω
0.25 MEG.

Figure 4

APPLICATIONS

Figure 4 shows a typical radio receiver schematic diagram with numbered arrows pointing to many of the most important testing points in the circuit. The following applications refer to these various points on this circuit diagram.

OSCILLATOR STRENGTH: The DC voltage developed on the oscillator grid is always directly proportional to the strength of oscillation. This voltage can be measured very readily at point 5 while the band switch is changed to the various bands and in each of its positions the main tuning condenser rotated from minimum to maximum capacity. This will give an indication of the strength of oscillation at all frequencies within the oscillator's range.

AVC VOLTAGE: The automatic volume control voltage developed by the incoming signal can be measured at a number of places in the receiver. Point 10 is where this voltage first appears. Point 18 is the same voltage after it has gone through a suitable time constant filter. Point 1 is the AVC voltage directly at the grid of the r-f amplifier tube, point 4 at the first detector tube and point 7 at the i-f amplifier tube. THIS DC VOLTAGE MEASURED AT POINT 10 IS A VERY CONVENIENT OUTPUT INDICATION DURING RECEIVER ALIGNMENT.

DC SUPPLY VOLTAGES: The power supply DC voltage can be measured at points 19 and 20; plate voltages at points 2, 6, 8, 13, 16, 22 and 24; screen voltages at point 17; and cathode voltages at points 3 and 14.

BIAS CELL VOLTAGE: The Junior VoltOhmyst will accurately measure the voltage delivered by a bias cell. Most voltmeters are not capable of making this measurement and in many cases will damage the cell if it is attempted. This voltage should be measured at point 11.

AFC DISCRIMINATOR VOLTAGE: The discriminator voltage developed in radio receivers employing automatic frequency control can be measured directly at the discriminator and also at the grid of the oscillator control tube.

F.M. DISCRIMINATOR VOLTAGE: The DC voltage developed by the discriminator in a frequency modulation receiver can be measured right at the discriminator.

TELEVISION RECEIVER ADJUSTMENTS: The Junior VoltOhmyst is very useful for measuring the DC voltage developed in the picture channel of a television receiver across the second detector load resistor. This measurement is most useful when adjusting antenna orientation and position as well as when adjusting antenna matching sections.

GASSY TUBES: The effect of a gassy tube is to put a positive charge on its control grid instead of the negative charge which should normally be present. The Junior VoltOhmyst is ideal for measuring the voltage directly at the control grid of any tube in order to determine whether or not this effect is present. Much gas will cause the tube to cease operating normally and will usually produce considerable distortion. In the case of an audio amplifier tube where the control grid is connected directly to the contact arm of the volume control a small amount of gas can be present which will in time cause the volume control to become very noisy. This amount of gas will not always produce a noticeable change in the operation of the radio receiver. Consequently if excessive difficulty is experienced with volume controls becoming noisy, in this type of circuit, this is one of the first things that should be checked.

AC VOLTAGES: The AC voltmeter within the Junior VoltOhmyst is extremely useful in measuring all AC voltages encountered in the average radio receiver. The measurements include line voltage, all voltages from power transformer secondaries, and audio voltage developed across the output transformer or voice coil as an indication of output during receiver alignment.

AC MEASUREMENTS WHEN DC IS ALSO PRESENT: A one microfarad (or larger) condenser can be used in series with either one of the test leads when using the AC voltmeter of the Junior VoltOhmyst. This will eliminate the DC component and permit the AC component to be measured. Such an arrangement makes possible use of the AC voltmeter to measure ripple voltage in a filter circuit at points 19, and 20; and use of the AC voltmeter as an output meter for alignment purposes at points 13, 16, 22, and 24; as well as for many other applications.

MEASUREMENT OF RESISTORS, COILS, AND INSULATION RESISTANCE: The Junior VoltOhmyst because of the extremely wide range it covers when used as an Ohmmeter can be used to accurately measure the value of all resistors used in modern radio receivers. It can also be used to measure the DC resistance value of all coils such as r-f coils, oscillator coils, detector coils, i-f transformer coils, power transformer coils, audio transformer coils, filter reactors and others. Leakage through the insulation of condensers, coil windings, etc. can be measured directly using the Ohmmeter section, or if above 1,000 megohms, with the extended range circuit described above. If such condensers are used for coupling purposes between the plate of one tube and the grid of the following tube, leakage in the insulation will manifest itself as a positive voltage applied to the grid of the second tube. This voltage can be readily measured using the DC voltmeter portion of the Junior VoltOhmyst.

ENGINEERING PROPERTY
Eng. Meter Room. Ext. 51

WARRANTY

This instrument is warranted to be free from defects in material and workmanship, in accordance with the terms of the guarantee card which accompanies each instrument. Each purchaser should promptly detach and mail his guarantee registry card to RCA Manfacturing Company, Inc., so that the guarantee may be recorded. This automatically places your name on the mailing list to receive future information on RCA test equipment from time to time.

Always contact your RCA distributor and give him full particulars before returning any instrument to the factory for any purpose.

Replacement Parts

Insist on genuine factory-tested parts, which are readily identified and may be purchased from authorized dealers.

STOCK No.	DESCRIPTION
43914	Cable—Lead with clip for "Common" connection
43913	Cable—Probe for "AC-OHMS" connection
43915	Cable—Shielded electronic DC voltmeter cable with 1 megohm isolating resistor
11622	Capacitor—0.003 mfd., 500 volts, mica
12484	Capacitor—0.25 mfd., 200 volts, paper
44288	Case—Meter case
43918	Control—1,000 ohms, AC shunt adjustment (R31)
43922	Control—3,000 ohms, AC series adjustment (R33)
19928	Control—3,000 ohms, zero adjustment (R21)
43917	Control—7,000 ohms, ohms adjustment (R23)
43916	Control—8,000 ohms, volts calibration adjustment (R22)
44091	Handle—Black leather, removable complete with fasteners
43920	Jack—Black insulated, for "Common" banana plug connection
43921	Jack—Open circuit jack for DC electronic voltmeter cable plug
43919	Jack—Red insulated, for "AC-OHMS" banana plug connection
44289	Jewell—Green pilot lamp jewel
43923	Meter—200 microamperes
43924	Rectifier—Copper oxide, half wave
43930	Resistor—9.5 ohms, ½ watt, 1% matched pair (R7)
43931	Resistor—90 ohms, ½ watt, 1% matched pair (R8)
19770	Resistor—900 ohms, ½ watt, 1% matched pair (R9)
19788	Resistor—1,100 ohms, ½ watt, 10% (R32)
19790	Resistor—1,300 ohms, ½ watt, 10% (R17)
43936	Resistor—2,300 ohms, 1 watt, 5% (R25, R26)
35255	Resistor—6,000 ohms, ½ watt, 10% (R28)
43937	Resistor—7,500 ohms, ½ watt, 10% (R34)
43932	Resistor—9,000 ohms, ½ watt, 1% matched pair (R10)
35374	Resistor—15,000 ohms, ½ watt, 10% (R29)
35370	Resistor—20,000 ohms, ½ watt, 1% matched pair (R13, R19, R20, R30)
43929	Resistor—30,000 ohms, ½ watt, 1% matched pair (R6)
35519	Resistor—56,000 ohms, ½ watt, 10% (R27)
43928	Resistor—70,000 ohms, ½ watt, 1% matched pair (R5, R14)
43933	Resistor—90,000 ohms, ½ watt, 1% matched pair (R11)
43927	Resistor—200,000 ohms, ½ watt, 1% matched pair (R4, R15)
43926	Resistor—700,000 ohms, ½ watt, 1% matched pair (R3)
43935	Resistor—700,000 ohms, 1 watt, 1% matched pair (R16)
35259	Resistor—2 meg., ½ watt, 1% matched pair (R2)
35358	Resistor—3 meg., ½ watt, 10% (R18)
43925	Resistor—7 meg., 1 watt, 1% matched pair (R1)
43934	Resistor—9.9 meg., ½ watt, 1% matched pair (R12)
43938	Switch—Range switch, 3 section—3 pole—6 position (S1)
43939	Switch—Selector switch, 2 section—5 pole—4 position (S2)
43940	Transformer—117 volts, 50-60 cycle, power transformer (T1)

THE 3-VOLT BATTERY IN THE JUNIOR VOLTOHMYST IS BURGESS TYPE F2BP OR EQUIVALENT

Trademark "VoltOhmyst" Reg. U. S. Pat. Off. by RCA Mfg. Co., Inc.

Printed in U. S. A.